HITACHI
SERVICE MANUAL

YK | No.999E

CT1341/CT13C1
CT1342/CT13C2

This service manual shows only essential items.
Our complete service manual including "alignment procedure", "trouble shooting" and "technical information" are issued by manual No. 996.

CONTENTS

SPECIFICATIONS 1
SAFETY PRECAUTIONS 2
PRODUCT SAFETY NOTICE 3
CONTROLS 3
TECHNICAL CAUTIONS 4
OPERATING SUMMARY 5
PRINTED WIRING BOARD 6
TUNER CIRCUIT DIAGRAM 11
BASIC CIRCUIT DIAGRAM 13
WIRING DIAGRAM 19
REPLACEMENT PARTS LIST 20

CAUTION: Before servicing this chassis, it is important that the service technician read the "Safety Precaution" and "Product Safety Notices" in this Service Manual.

SPECIFICATIONS

ANTENNA INPUT IMPEDANCE	300 Ω and 75 Ω
CHANNEL COVERAGE RANGE	
VHF	2 ~ 13
UHF	14 ~ 83
INTERMEDIATE FREQUENCIES	
Picture I-F Carrier	45.75 MHz
Sound I-F Carrier	41.25 MHz
Sound I-F	4.5 MHz
POWER INPUT	120 V, 60 Hz
POWER RATING	61 W
CONVERGENCE	Self convergence
FOCUS	Electrostatic
PICTURE TUBE	370LGB22
SOUND OUTPUT	1 W, 400 Hz
SPEAKER	7.7 cm, 25 Ω
DIMENSIONS (W)	43.6 cm
(H)	34.3 cm
(D)	39.8 cm
WEIGHT	Appr. 11.5 kg

SPECIFICATIONS AND PARTS ARE SUBJECT TO CHANGE FOR IMPROVEMENT

SOLID STATE COLOR TELEVISION

August 1984 **YOKOHAMA WORKS**

SAFETY PRECAUTIONS

NOTICE: Comply with all cautions and safety related notes located on or inside the cabinet and on the chassis or picture tube.

WARNING: Since the chassis of this receiver is connected to one side of AC power supply during operation, whenever the receiver is plugged in, service should not be attempted by anyone unfamiliar with the precautions necessary when working on this type of receiver.

The following precautions should be observed:

1. Do not install, remove, or handle the picture tube in any manner unless shatterproof goggles are worn. People not so equipped should be kept away while picture tubes are handled. Keep picture tube away from the body while handling.
2. When service is required, an isolation transformer should be inserted between power line and the receiver before any service is performed on a "HOT" chassis receiver.
3. When replacing a chassis in the receiver, all the protective devices must be put back in place, such as barriers, non-metallic knobs, adjustment and compartment covershields, isolation resistor-capacitor, etc.
4. When service is required, observe the original lead dress. Extra precaution should be taken to assure correct lead dress in the high voltage circuitry area.
5. Always use the manufacturer's replacement components. Especially critical components as indicated on the circuit diagram should not be replaced by other manufacture's. Furthermore where a short circuit has occurred, replace those components that indicate evidence of overheating.
6. Before returning a serviced receiver to the customer, the service technician must thoroughly test the unit to be certain that it is completely safe to operate without danger of electrical shock, and be sure that no protective device built into the receiver by the manufacturer has become defective, or inadvertently defeated during servicing.

Therefore, the following checks should be performed for the continued protection of the customer and service technician.

Leakage Current Cold Check

With the AC plug removed from the 120V AC 60Hz source, place a jumper across the two plug prongs. Turn the AC power switch on. Using an insulation tester (DC 500V), connect one lead to the jumpered AC plug and touch the other lead to each exposed metal part (antennas, screwheads, metal overlays, control shafts, etc.), particularly any exposed metal part having a return path to the chassis. Exposed metal parts having a return path to the chassis should have a minimum resistor reading of 0.3MΩ and a maximum resistor reading of 5MΩ. Any resistor value below or above this range indicates an abnormality which requires corrective action. Exposed metal parts not having a return path to the chassis will indicate an open circuit.

Leakage Current Hot Check

Plug the AC line cord directly into a 120V AC 60Hz outlet (do not use an isolation transformer for this check). Turn the AC power switch on. Using a "leakage Current Tester (Simpson Model 229 equivalent)", measure for current from all exposed metal parts of the cabinet (antennas, screwheads, metal overlays, control shaft, etc.), particularly any exposed metal part having a return path to the chassis, to a known earth ground (water pipe, conduit, etc.). Any current measured must not exceed 0.5mA.

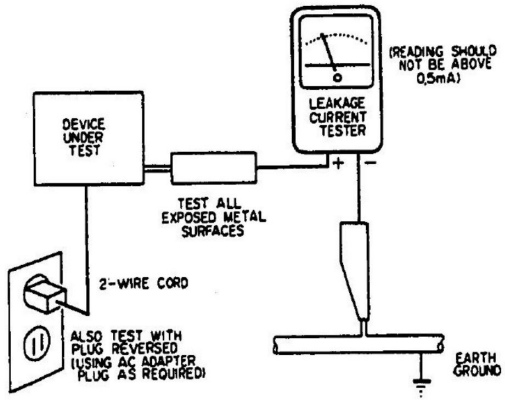

AC Leakage Test

ANY MEASUREMENTS NOT WITHIN THE LIMITS OUTLINED ABOVE ARE INDICATIVE OF A POTENTIAL SHOCK HAZARD AND MUST BE CORRECTED BEFORE RETURNING THE RECEIVER TO THE CUSTOMER.

High Voltage

This receiver is provided with a hold down circuit for clearly indicating that voltage has increased in excess of a predetermined value. Comply with all notes described in this Service Manual regarding this hold down circuit when servicing, so that this hold down circuit may correctly be operated.

Serviceman warning

With minimum Brightness and Picture, operating high voltage in this receiver is lower than 26.0KV. In case any component having influence on high voltage is replaced, confirm that high voltage with minimum Brightness and Picture is lower than 26.0KV. To measure H.V. use a high impedance H.V. meter. Connect (-) to chassis earth and (+) to the CRT anode button. (See the following connection diagram).

NOTE: Turn power switch off without fail before the connection with Anode button is made.

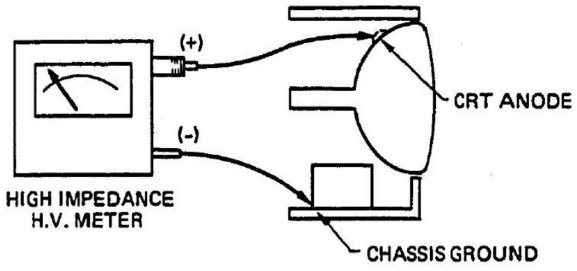

X-radiation

TUBE: The primary source of X radiation in this receiver is the picture tube. The tube utilized for the above mentioned function in this chassis is specially constructed to limit X radiation emissions.

For continued X radiation protection, the replacement tube must be the same type as the orignal, HITACHI approved type.

When trouble shooting and making test measurements in a receiver with a problem of excessive high voltage, avoid being unnecessarily close to the picture tube and the high voltage component.

Do not operate the chassis longer than is necessary to locate the cause excessive voltage.

PRODUCT SAFETY NOTICE

Many electrical and mechanical parts in HITACHI television receiver have special safety related characteristics. These are often not evident from visual inspection nor can the protection afforded by them necessarily be obtained by using replacement components rated for higher voltage, wattage, etc. Replacement parts which have these special safety characterisitcs are identified in this Service Manual.

Electrical components having such features are identified by marking with a ⚠ on the schematics and on the parts list in this Service Manual.

The use of a substitute replacement component which does not have the same safety characteristics as the HITACHI recommended replacement one, shown in the parts list in this Service Manual, may create shock, fire, X-radiation, or other hazards.

Product Safety is continuously under review and new instructions are issued from time to time. For the latest information, always consult the current HITACHI Service Manual. A subscription to, or additional copies of, HITACHI Service Manual may be obtained at a nominal charge from HITACHI SALES CORPORATION.

CONTROLS

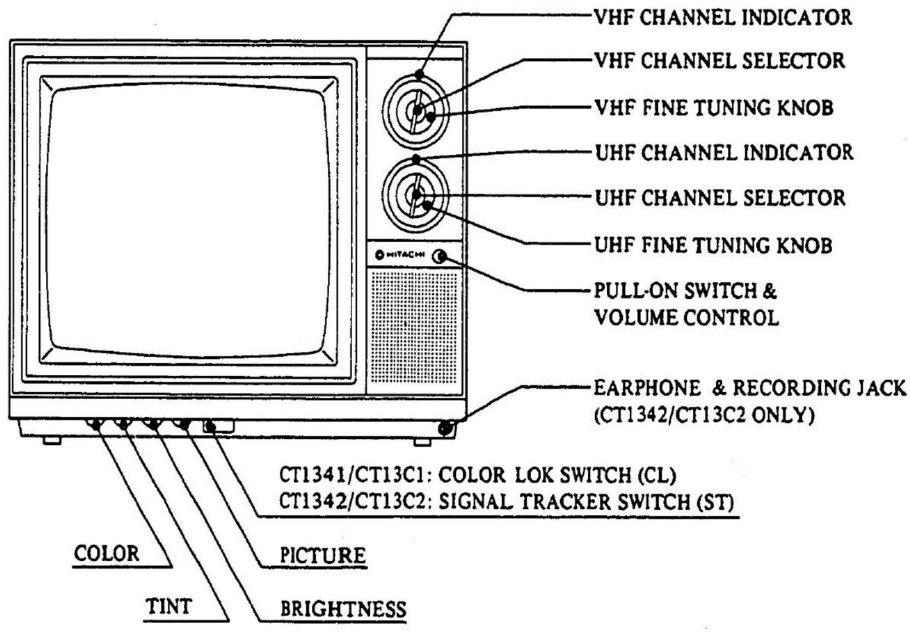

TEHCNICAL CAUTIONS

[CHECK OF HIGH VOLTAGE HOLD DOWN CIRCUIT]

Checking of the high voltage hold down circuit operation

1. Turn the switch of the set OFF.
2. Connect a high voltage voltmeter between the CRT anode and the chassis ground as shown in Fig. 1.
3. Short R905 using a shorting lead wire as shown in Fig. 2.
4. Set Brightness/Picture controls to max.
5. Turn the switch of the set ON after setting the AC input voltage to 90V, and then gradually increase the AC input voltage and check that the picture disappears when the high voltage is less than 29.0KV.
6. Turn the switch of the set OFF immediately after checking that the picture disappears.
7. Remove the adjusting jig and the voltmeter.

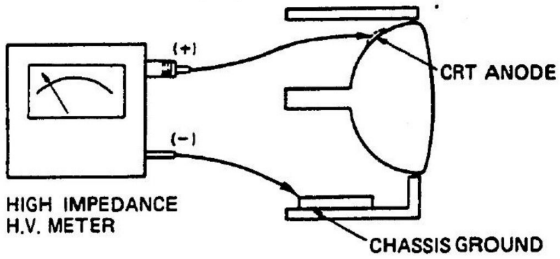

Fig. 1 Connection of H.V. Meter

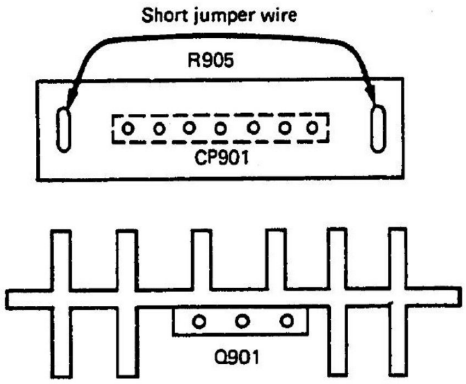

Fig. 2

OPERATING SUMMARY

1. TURNING THE SET ON –

(PULL-ON/VOL)

Pull outward on the PULL-ON SWITCH (PULL-ON/VOL) to turn your set ON. (To turn your set OFF, push the PULL-ON SWITCH.)

2. VOLUME CONTROL –

(PULL-ON/VOL)

Rotate the VOLUME CONTROL (PULL-ON/VOL) to the desired volume. To increase volume, turn this knob to the right.

3. AUTOMATIC FREQUENCY CONTROL (AFC) –

(COLOR LOK SWITCH or SIGNAL TRACKER SWITCH)

Your set is equipped with Automatic Frequency Control (AFC) to prevent channel "drifting" and to simplify tuning to both VHF and UHF channels. Normally the COLOR LOK SWITCH or SIGNAL TRACKER SWITCH should be at the "ON" position.

In case of extreme interference, or an extremely weak station, it may be desirable to operate the TV with the COLOR LOK SWITCH or SIGNAL TRACKER SWITCH disengaged. Disengage the COLOR LOK SWITCH or SIGNAL TRACKER SWITCH and fine tune the picture until it is bright and clear.

4. VHF CHANNEL SELECTION –

(VHF CHANNEL SELECTOR)

To select VHF channels, rotate the VHF CHANNEL SELECTOR to the desired channel.

5. VHF FINE TUNING –

(VHF FINE TUNING KNOB)

In case of extreme interference or an extremely weak station, disengage the COLOR LOK SWITCH or SIGNAL TRACKER SWITCH then push in and turn the FINE TUNING KNOB clockwise (right) unitl the picture takes on a broken-up appearance. Turn it slowly back counter-clockwise (left) until the sharpest picture is obtained. The picture is then at its proper point. Once the Fine Tuning is set for each active channel in your area, switch the COLOR LOK SWITCH or SIGNAL TRACKER SWITCH "ON", no further adjustment should be necessary.

6. UHF CHANNEL SELECTION –

(UHF CHANNEL SELECTOR)

To tune in UHF Channels, set the VHF CHANNEL SELECTOR to the "U" position. Turn the UHF CHANNEL SELECTOR to the desired channel.

7. UHF FINE TUNING –

(UHF FINE TUNING KNOB)

Disengage the COLOR LOK SWITCH or SIGNAL TRACKER SWITCH then turn the UHF FINE TUNING KNOB clockwise (right) slowly until the picture takes on a broken-up appearance. Turn it slowly back counterclockwise (left) until the sharpest picture is obtained. The picture is then at its proper point.

Note:

1. When tuning with VHF FINE TUNING KNOB, be sure to push it during rotating.
2. UHF Channel Selector knob cannot be rotated lower than channel 14 or higher than channel 83.

PRINTED WIRING BOARD

SWITCH P.W. BOARD

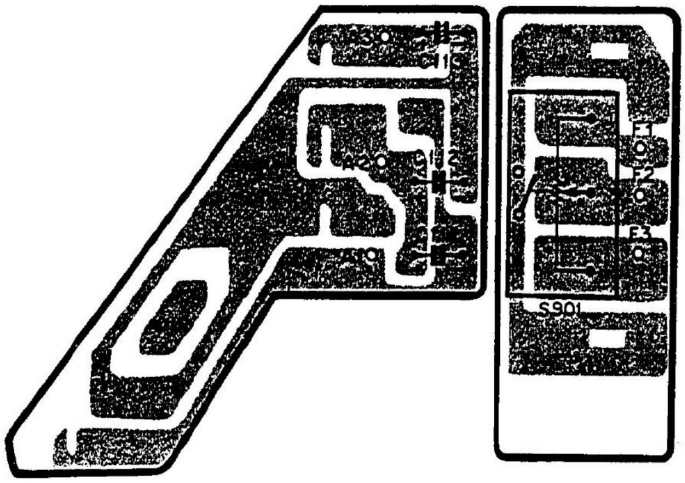

C.R.T. P.W. BOARD

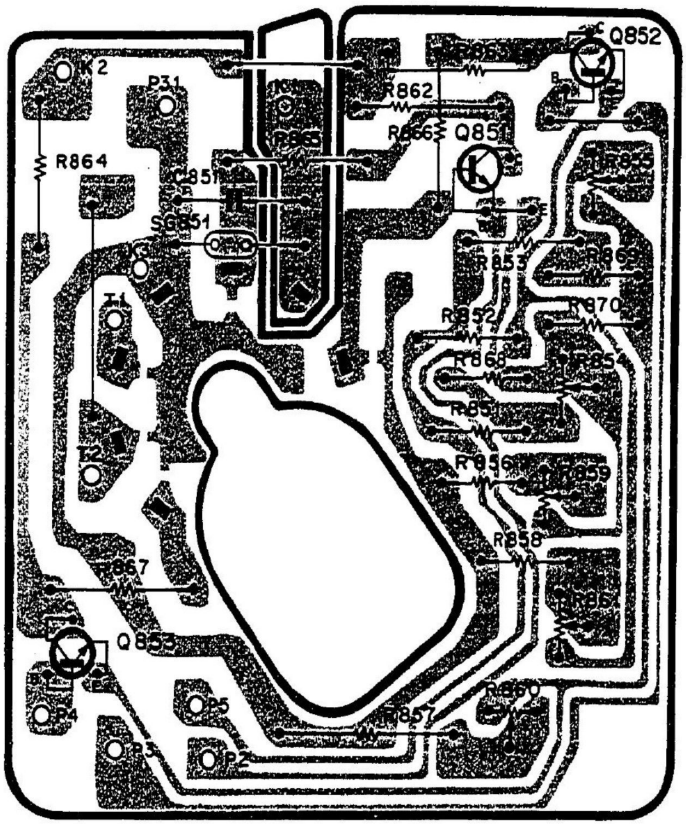

MAIN P.W. BOARD (CT1341/CT13C1)

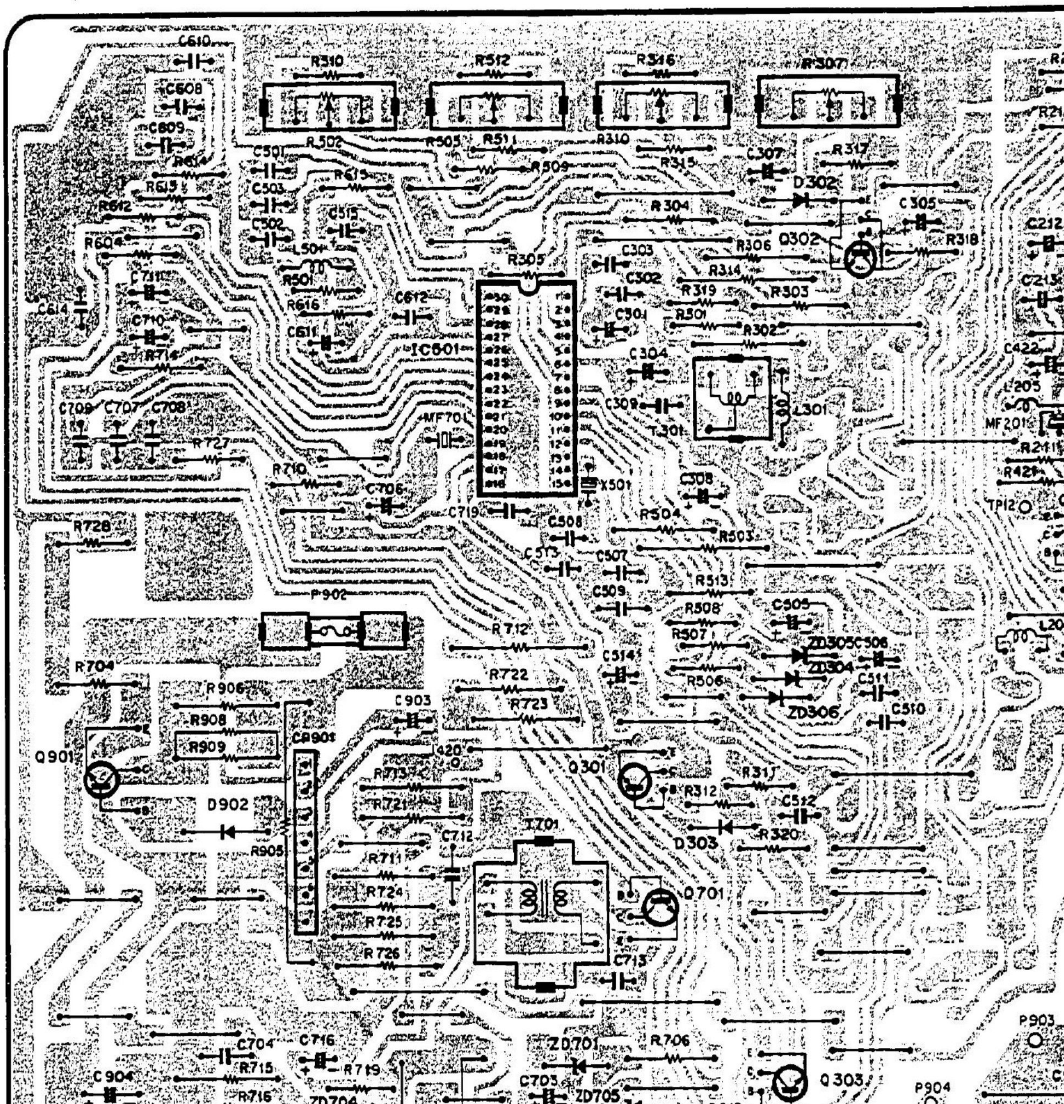

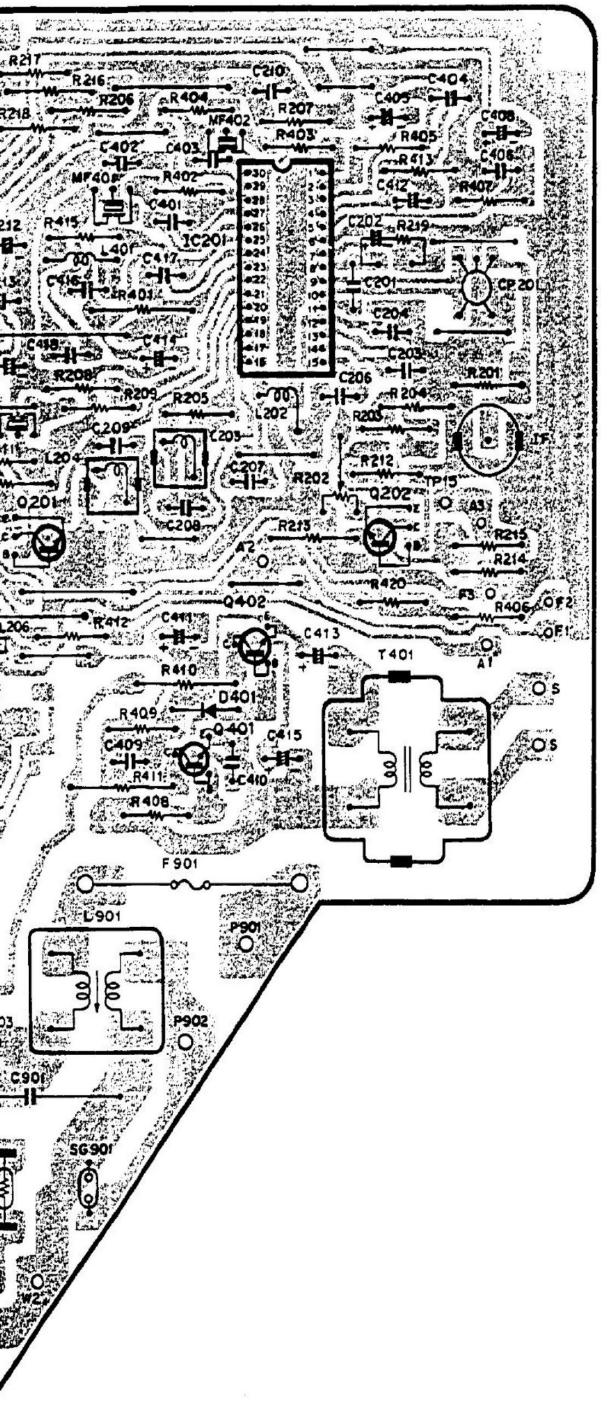
R217
R216
R218
R206
R404
C210
R207
C404
C405
C408
MF402
R403
R405
C402
C403
R413
C406
MF401
R402
C412
R407
C401
R415
IC201
C202
R219
L401
C417
C416
R401
C201
CP 201
C204
C418
C414
C203
R208
R201
R209
R205
C206
R204
L202
R203
C209
C203
IF
L204
C207
R212
R202
TP15
Q201
Q202
A3
C208
R213
R215
A2
R214
R420
F3
R406
F2
Q402
L206
R412
C411
C413
F1
T401
A1
R410
D401
S
R409
Q401
C415
C409
S
R411
C410
R408
F901
L901
P901
P902
C901
SG901
W2

MAIN P.W. BOARD (CT1342/CT13C2)

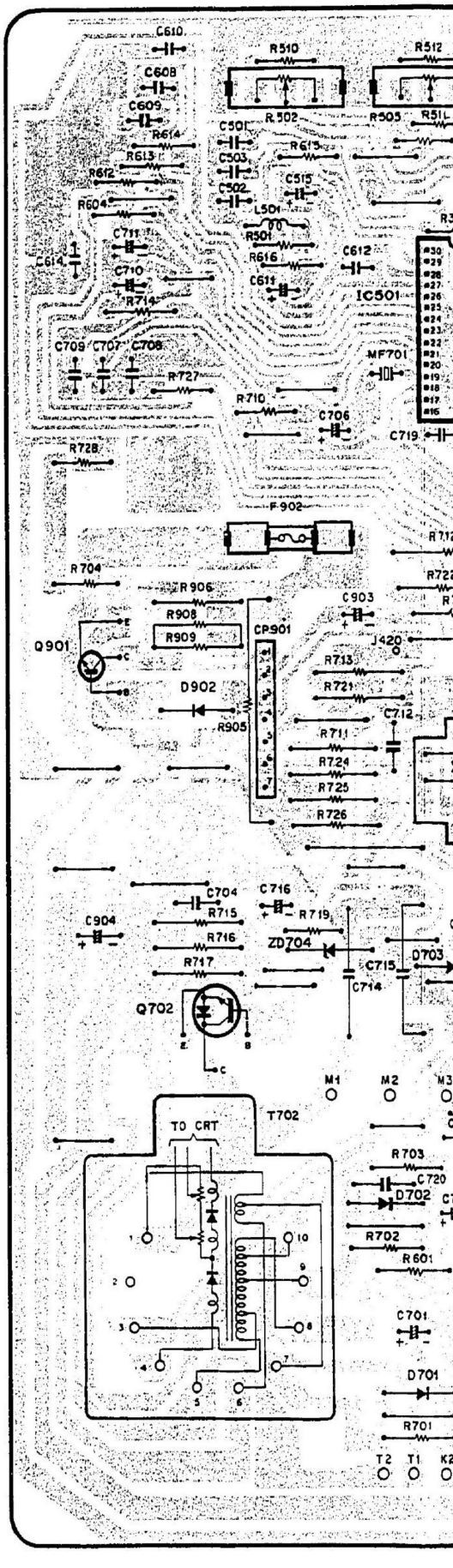

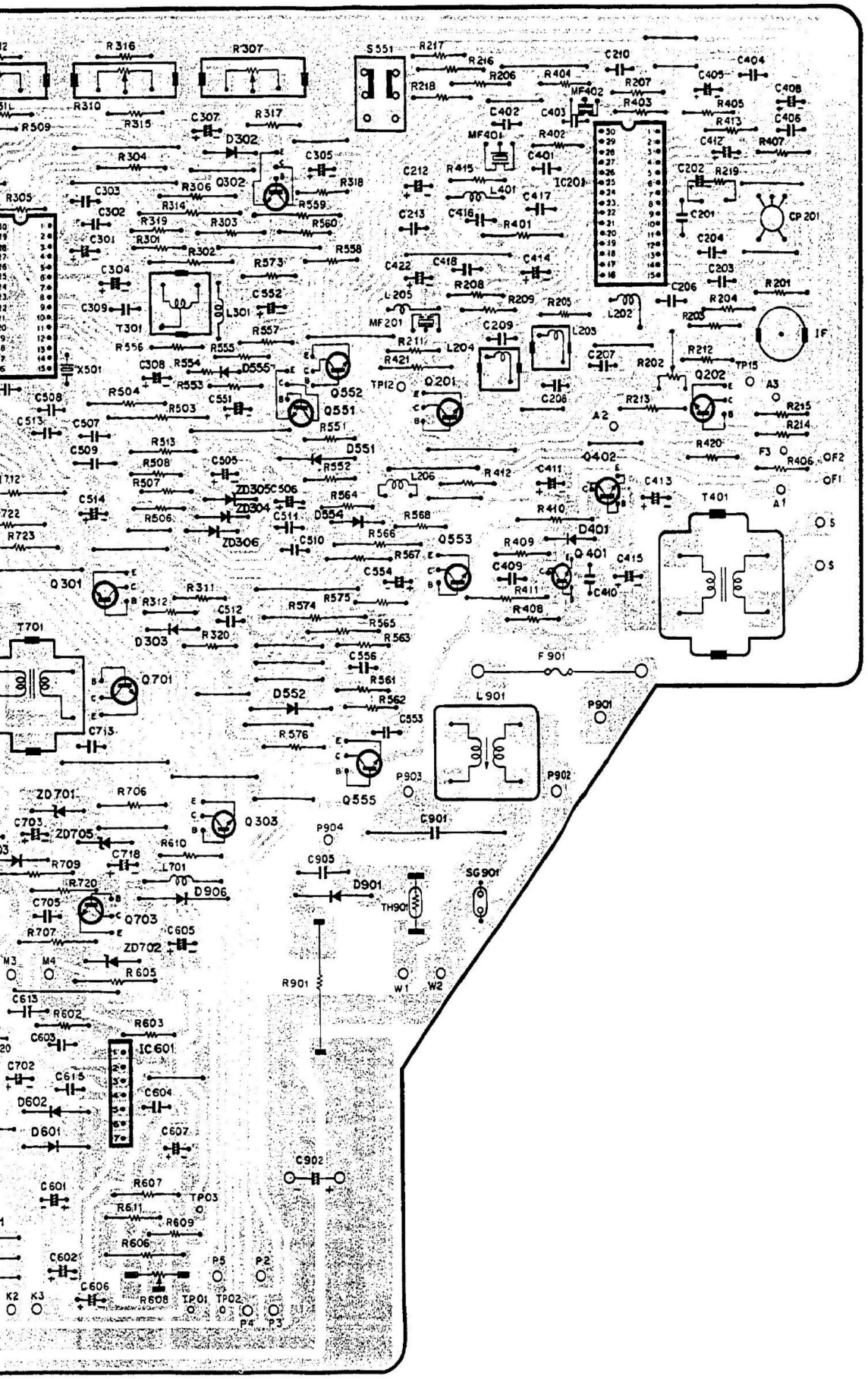
R316
R307
S551
R217
R216
R206
R404
C210
C404
R218
MF402
R207
C405
C408
R310
R315
C307
R317
C402
C403
R403
R405
R509
D302
MF401
R402
R413
C406
R304
C305
C401
C412
R407
Q302
R318
C212
R415
IC201
C202
R219
R305
C303
R306
L401
C417
R314
R559
C213
C416
C201
CP201
C302
R319
R303
R560
R401
C301
R301
R302
R558
C204
C304
R573
C422
C418
C414
C203
C552
L205
R208
R209
R205
C206
R201
C309
L301
L202
R204
T301
MF201
C209
L203
R203
IF
R557
R211
L204
R556
R555
R421
C207
R202
R212
TP15
X501
C308
R554
D555
Q552
TP12
Q201
Q202
A3
R504
R553
C551
C208
R213
R215
C508
R503
Q551
A2
R214
C513
C507
R551
R513
D551
R420
F3
R406
OF2
C509
R508
C505
R552
Q402
OF1
R507
ZD305
C506
L206
R412
C411
C413
A1
C514
ZD304
R564
T401
R506
C511
D554
R568
R410
R723
ZD306
C510
R566
Q553
D401
R409
Q401
C415
R567
C409
C554
C410
Q301
R311
R411
R312
C512
R574
R575
R408
T701
D303
R320
R565
R563
C556
F901
Q701
R561
D552
R562
L901
P901
C553
C713
R576
P903
P902
Q555
ZD701
R706
Q303
C901
C703
ZD705
P904
R610
C718
C905
R709
L701
D901
SG901
R720
D906
TH901
C705
Q703
R707
C605
ZD702
M3
M4
R605
R901
W1
W2
C613
R602
R603
C603
IC601
C702
C615
C604
D602
D601
C607
C902
C601
R607
TP03
R611
R609
R606
C602
P5
P2
C606
K2
K3
R608
TP01
TP02
P4
P3

TUNER CIRCUIT DIAGRAM (HU-427A)

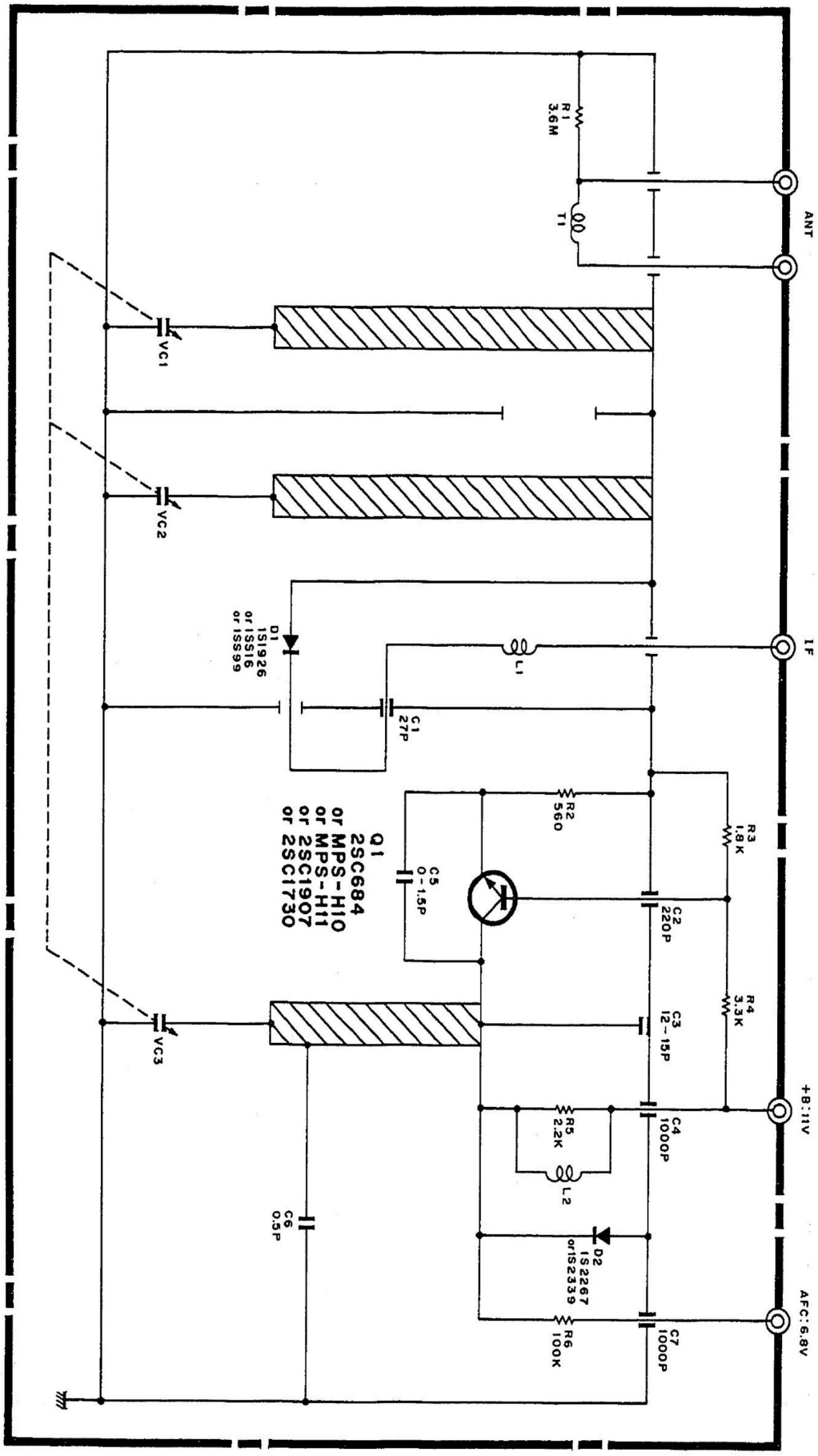

TUNER CIRCUIT DIAGRAM (HT-457C)

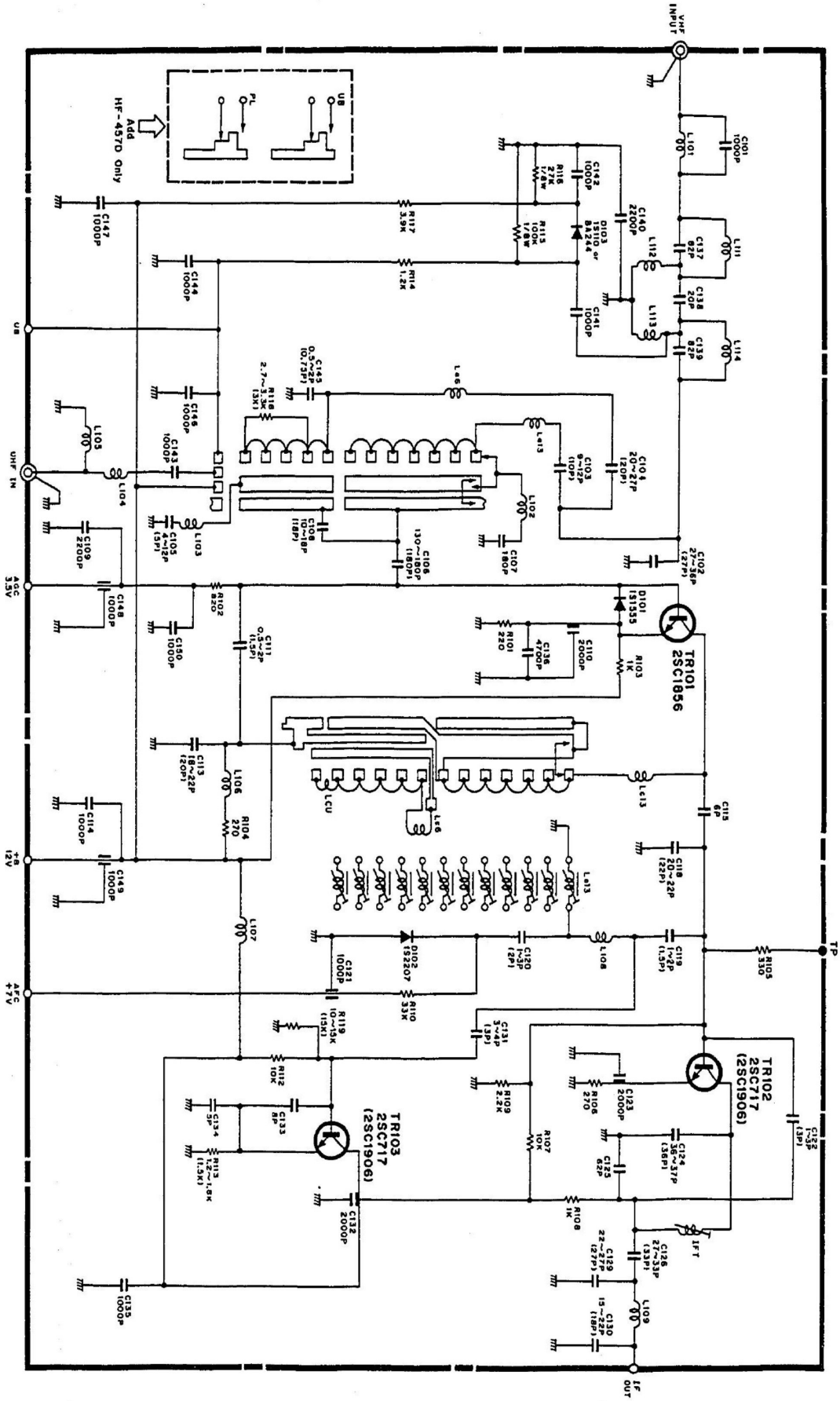

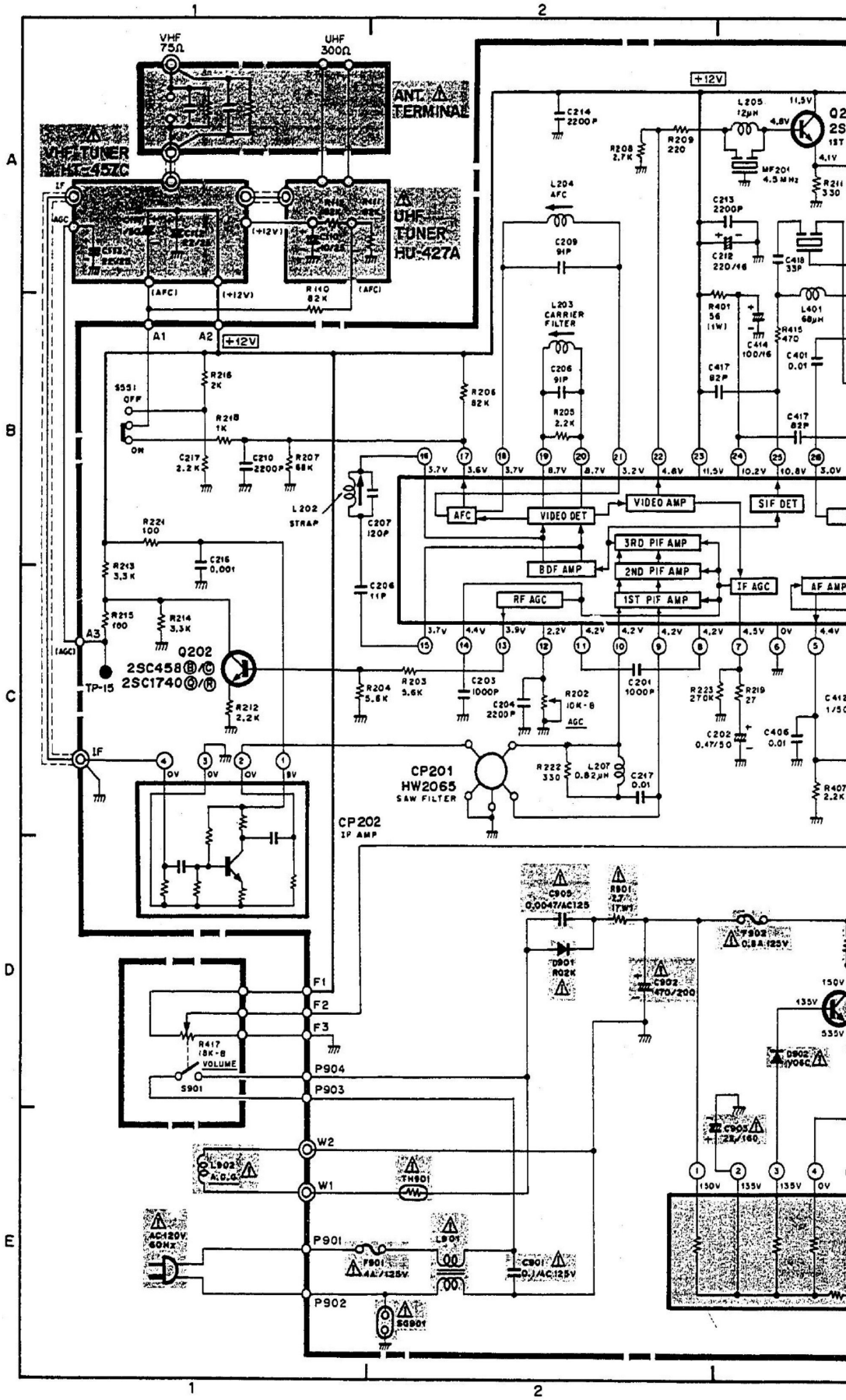
VHF 75Ω
UHF 300Ω
ANT. TERMINAL
VHF TUNER HU-457C
UHF TUNER HU-427A
+12V
VIDEO AMP
VIDEO DET
AFC
SIF DET
3RD PIF AMP
2ND PIF AMP
1ST PIF AMP
BDF AMP
RF AGC
IF AGC
AF AMP
Q202
2SC458 B/C
2SC1740 Q/R
CP201
HW2065
SAW FILTER
CP202
IF AMP
L202 STRAP
L203 CARRIER FILTER
L204 AFC
VOLUME
AC120V 60Hz

BASIC CIRCUIT DIAGRAM (CT1341/CT13C1)

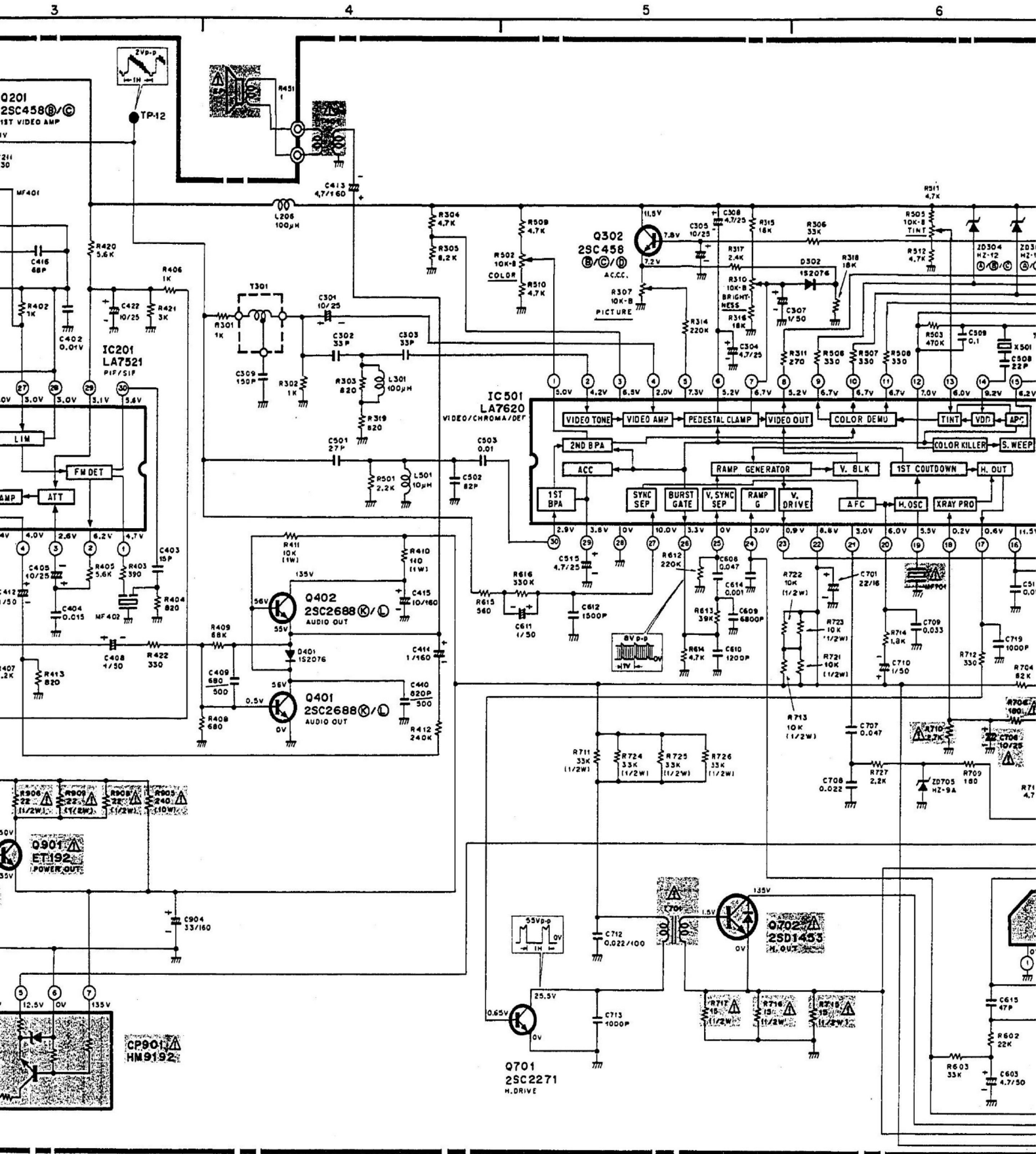

- Since this is a basic circuit diagram, the value of the parts is subject to be
- All DC voltage to be measured with a tester (100kΩ/V).
  Voltage taken on a complex color bar signal including a standard color ba

ETY NOTE: Components market with a ⚠ and shaded have special characteristics important to placing any of these components, read carefully the PRODUCT SAFETY NOTICE of this Service grade the safety of the receiver through improper servicing.

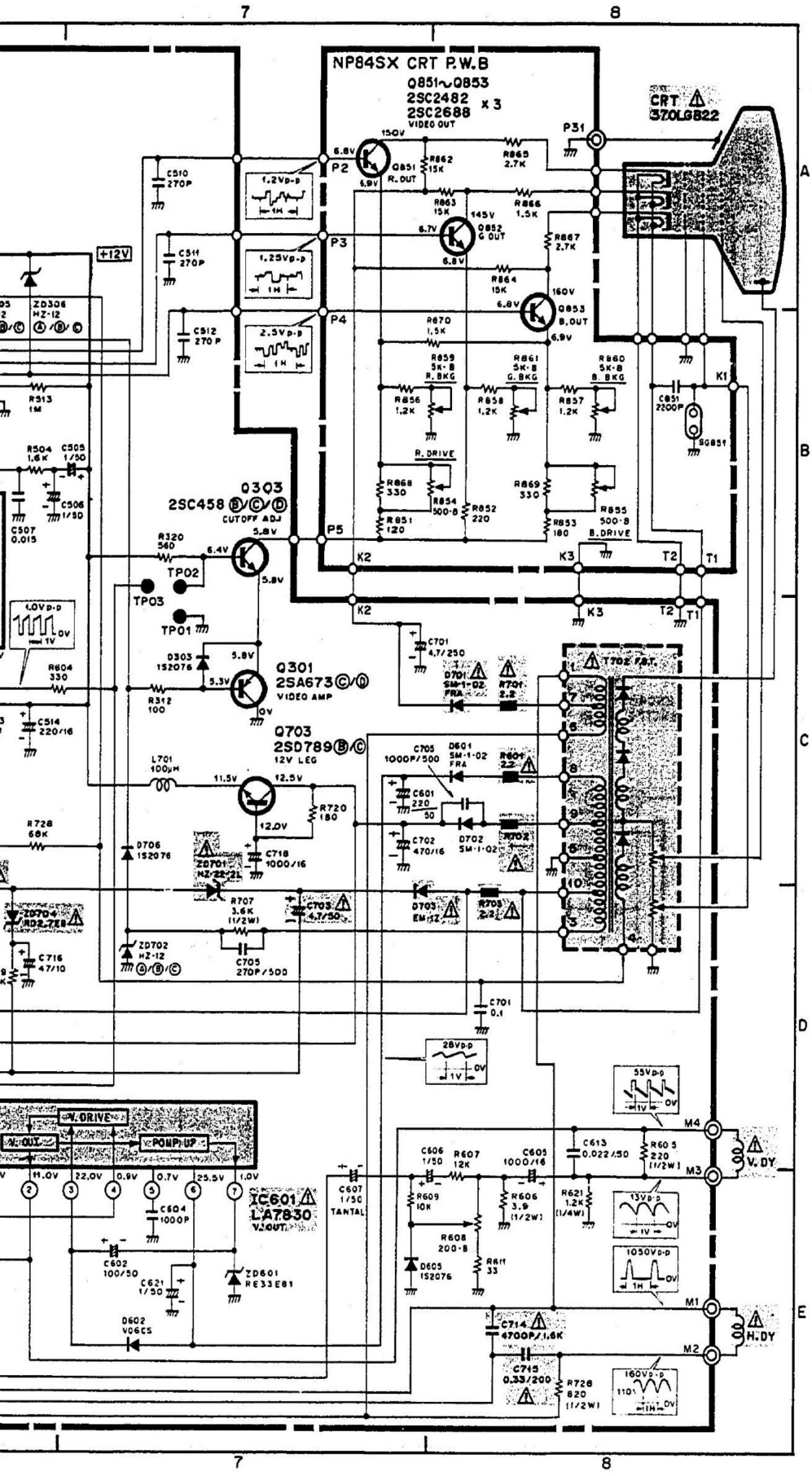

altered for improvement.

r signal.

PRODUCT SAFETY NOTE: Components marked with a ⚠ and shaded have special characteristics important to safety. Before replacing any of these components, read carefully the PRODUCT SAFETY NOTICE of this Service Manual. Don't degrade the safety of the receiver through improper servicing.

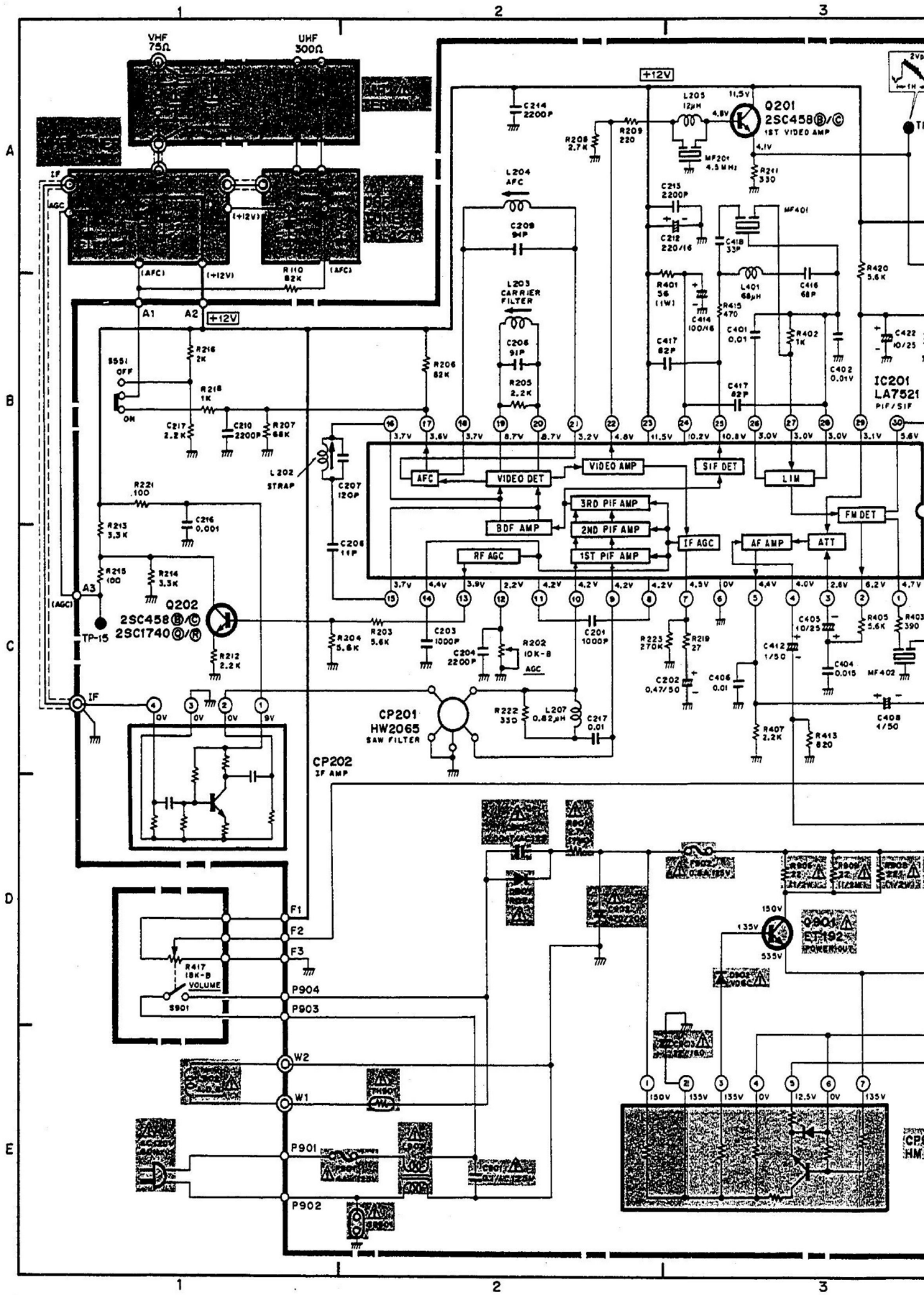

- Since this is a basic circuit diagram, the value of the parts is s
- All DC voltage to be measured with a tester (100kΩ/V).
  Voltage taken on a complex color bar signal including a stand

BASIC CIRCUIT DIAGRAM (CT1342/CT13C2)

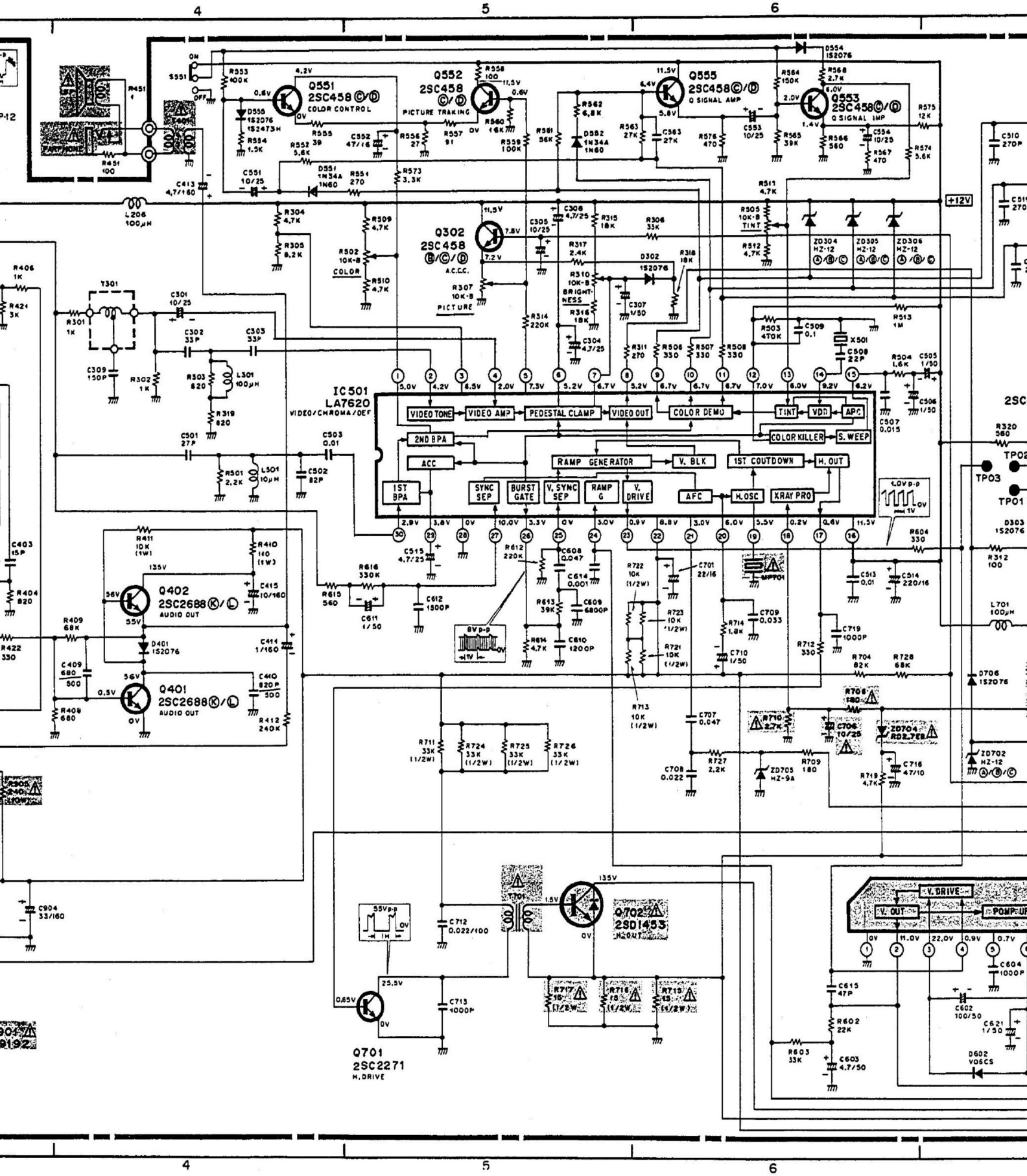

ubject to be altered for improvement.

lard color bar signal.

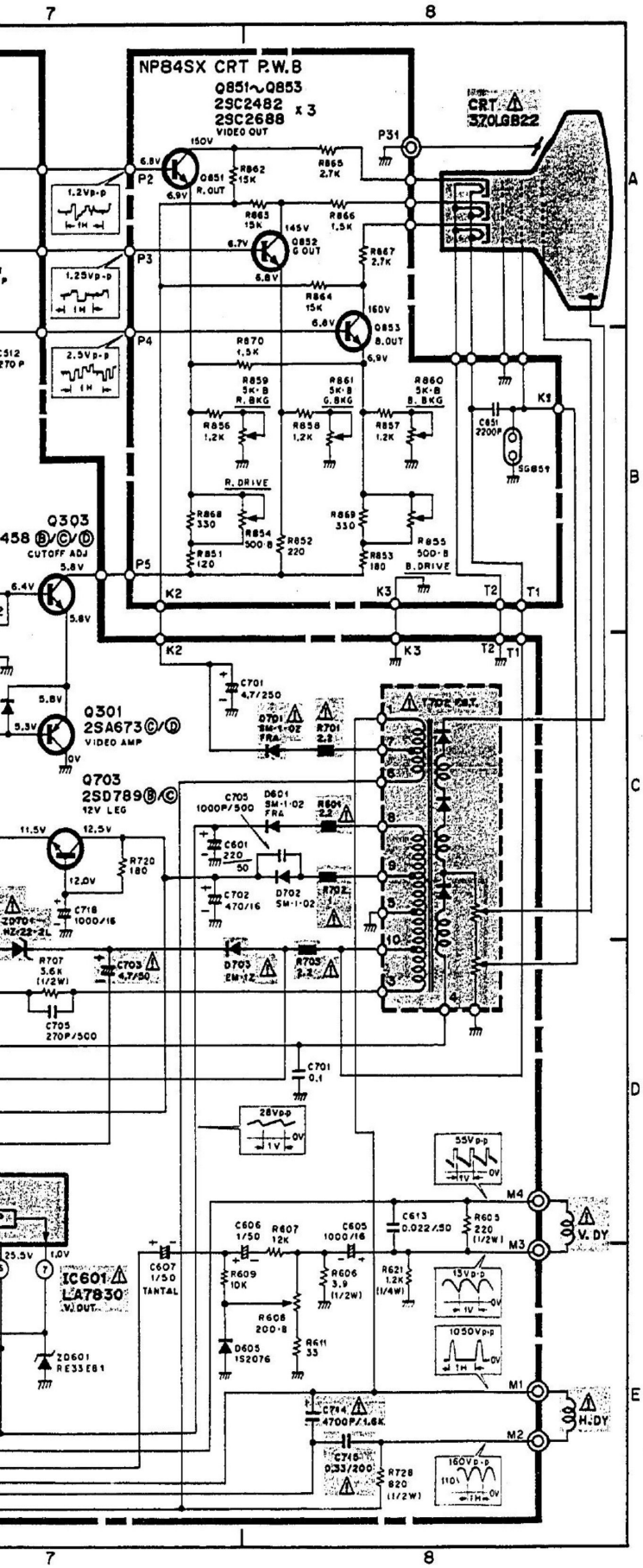
NP84SX CRT P.W.B
Q851~Q853
2SC2482 x 3
2SC2688
VIDEO OUT
CRT
370LGB22
Q303
CUTOFF ADJ
Q301
2SA673
VIDEO AMP
Q703
2SD789
12V LEG
IC601
LA7830
V. OUT
V. DY
H. DY
R. DRIVE
B. DRIVE
R. BKG
G. BKG
B. BKG
R. OUT
G OUT
B. OUT
T702 F.B.T.
ZD601
RE33E81
D605
1S2076
C607
1/50
TANTAL
28Vp-p
55Vp-p
13Vp-p
1050Vp-p
160Vp-p
1.2Vp-p
1.25Vp-p
2.5Vp-p

WIRING DIAGRAM

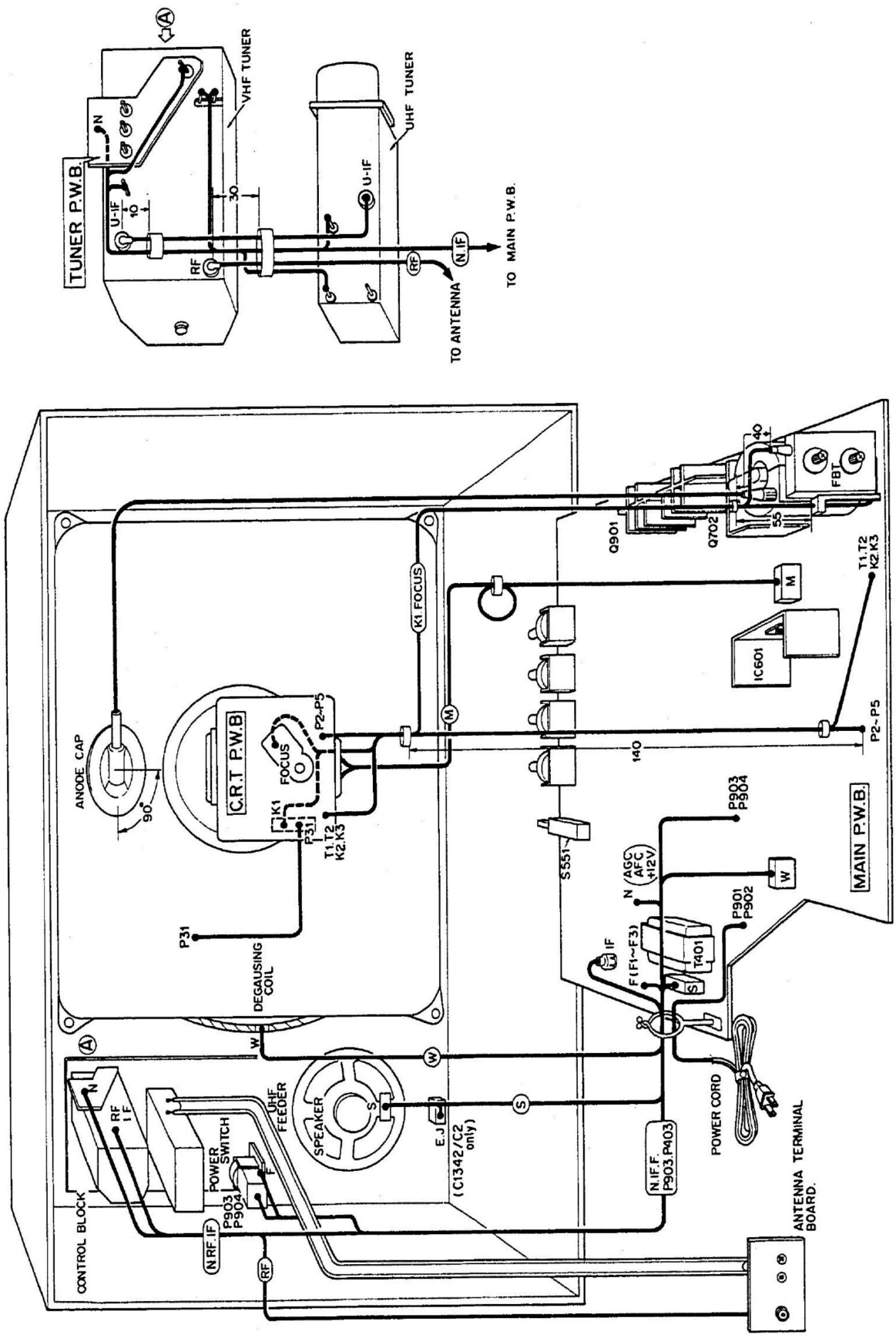

REPLACEMENT PARTS LIST

PRODUCT SAFETY NOTE: Components marked with a ⚠ have special characteristics important to safety. Before replacing any of these components, read carefully, the PRODUCT SAFETY NOTICE of this Service Manual. Don't degrade the safety of the receiver through improper servicing.

ABBREVIATIONS: Capacitors . . . . . CD: Ceramic disk, PF: Polyester film, EL: Electrolytic, PP: Polypropylene, PR: Paper, TA: Tantalum
Resistors . . . . . CF: Carbon film, CC: Carbon composition, MF: Metal oxide film, VR: Varialbe resistor, WW: Wire wound, FR: Fuse resistor

SYMBOL NO.	PART NO.	DESCRIPTION
		CAPACITORS
C110	0253066	EL 10MF 25V
C111	0253082	EL 1MF 50V
C112	0253067	EL 22MF 25V
C113	0253067	EL 22MF 25V
C201	0244139	CD 1000PF +-10% 50V
C202	0259958	EL 0.47MF 50V
C203	0244139	CD 1000PF +-10% 50V
C204	0244105	CD 2200PF +-10% 50V
C206	0246571	CD 11PF +-5% 50V
C207	0246596	CD 120PF +-5% 50V
C208	0246463	CD 91PF +-5% 50V
C209	0246463	CD 91PF +-5% 50V
C210	0244105	CD 2200PF +-10% 50V
C212	0253051	EL 220MF 16V
C213	0244105	CD 2200PF +-10% 50V
C214	0244105	CD 2200PF +-10% 50V
C216	0277001	PF 1000PF +-10% 50V
C217	0277001	PF 1000PF +-10% 50V
C301	0253066	EL 10MF 25V
C302	0248672	CD 33PF +-5% 50V
C303	0248672	CD 33PF +-5% 50V
C304	0253065	EL 4.7MF 25V
C305	0253066	EL 10MF 25V
C307	0253082	EL 1MF 50V
C308	0253065	EL 4.7MF 25V
C309	0248688	CD 150PF +-5% 50V
C401	0244171	CD 0.01MF +80-20% 50V
C402	0244171	CD 0.01MF +80-20% 50V
C403	0248664	CD 15PF DC50V
C404	0277015	PF 0.015MF +-10% 50V
C405	0253066	EL 10MF 25V
C406	0244171	CD 0.01MF +80-20% 50V
C408	0253082	EL 1MF 50V
C409	0243511	CD 680PF +-5% 50V
C410	0243512	CD 820PF +-10% 500V
C411	0253452	EL 1MF 160V
C412	0253082	EL 1MF 50V
C413	0253455	EL 4.7 MF 160V
C414	0253050	EL 100MF 16V
C415	0253456	EL 10 MF 160V
C416	0248680	CD 68PF +-5% 50V
C417	0248682	CD 82PF +-5% 50V
C418	0248672	CD 33PF +-5% 50V
C419	0244103	CD 1500PF +-10% 50V
C422	0253066	EL 10MF 25V
C501	0248670	CD 27PF +-5% 50V
C502	0248682	CD 82PF +-5% 50V
C503	0277013	PF 0.01MF +-10% 50V
C505	0253082	EL 1MF 50V
C506	0253082	EL 1MF 50V
C507	0277015	PF 0.015MF +-10% 50V
C508	0246448	CD 22PF +-5% 50V
C509	0277025	PF 0.1MF +-10% 50V
C510	0244136	CD 270 PF+-10% 50V
C511	0244136	CD 270 PF+-10% 50V
C512	0244136	CD 270 PF+-10% 50V
C513	0277013	PF 0.01MF +-10% 50V
C514	0253051	EL 220MF 16V
C515	0253065	EL 4.7MF 25V
● C551	0253066	EL 10MF 25V
● C552	0253049	EL 47MF 16V
● C553	0253066	EL 10MF 25V
● C554	0253066	EL 10MF 25V
● C556	0248664	CD 15PF DC50V
C601	0253091	EL 220MF 50V
C602	0253090	EL 100MF 50V
C603	0253065	EL 4.7MF 50V
C604	0244139	CD 1000PF +-10% 50V
C605	0253054	EL 1000MF 16V
C606	0253082	EL 1MF 50V
C607	0292716	TA 1 MF+-20% 20V
C608	0277021	PF 0.047MF +-10% 50V
C609	0244111	CD 6800PF +-10% 50V
C610	0244102	CD 1200PF +-10% 50V
C611	0253082	EL 1MF 50V
C612	0244103	CD 1500PF +-10% 50V
C613	0279851	PF 0.022MF +-10% 100V
C614	0244139	CD 1000PF +-10% 50V
C615	0248682	CD 82PF +-5% 50V
C621	0253082	EL 1MF 50V
C701	0259842	EL 4.7MF 250V (HR)
C702	0253053	EL 470MF 16V
⚠ C703	0253066	EL 10MF 25V
C704	0277025	PF 0.1MF +-10% 50V
C705	0243506	CD 270PF +-10% DC500WV

● . . . . . For CT1342/CT13C2 only

PRODUCT SAFETY NOTE: Components marked with a ⚠ have special characteristics important to safety. Before replacing any of these components, read carefully, the PRODUCT SAFETY NOTICE of this Service Manual. Don't degrade the safety of the receiver through improper servicing.

SYMBOL NO.	PART NO.●	DESCRIPTION
⚠C706	0253066	EL 10MF 25V
C707	0277021	PF 0.047MF +-10% 50V
C708	0277017	PF 0.022MF +-10% 50V
C709	0277019	PF 0.033MF +-10% 50V
C710	0253082	EL 1MF 50V
C711	0253047	EL 22MF 16V
C712	0279851	PF 0.022MF +-10% 100V
C713	0244501	CD 1000PF +-10% 500V
⚠C714	0299728	PP 4700PF 1600V
⚠C715	0299932	PP 0.33MF +-10% 200V
C716	0253029	EL 47MF 10V
C718	0253054	EL 1000MF 16V
C719	0244139	CD 1000PF +-10% 50V
C720	0244501	CD 1000PF +-10% 500V
C851	0244215	CD 2200PF +-10% 2KV
⚠C901	0279718	MP 0.1MF+-10% 125V
⚠C902	0259976	EL 470MF DC200WV
⚠C903	0252710	EL 22MF 160V
C904	0253460	EL 100MF 16V
⚠C905	0249150	CD 4700PF AC125V
		RESISTORS
R110	0100111	CF 82K OHM +-5% 1/8W
R111	0100111	CF 82K OHM +-5% 1/8W
R112	0100111	CF 82K OHM +-5% 1/8W
R202	0150038	VR 10K OHM-B RS-8
R203	0100083	CF 5.6K OHM +-5% 1/8W
R204	0100083	CF 5.6K OHM +-5% 1/8W
R205	0100073	CF 2.2K OHM +-5% 1/8W
R206	0187111	CF 82K OHM +-5% 1/16W
R207	0187109	CF 68K OHM +-5% 1/16W
R208	0100075	CF 2.7K OHM +-5% 1/8W
R209	0100049	CF 220 OHM +-5% 1/8W
R211	0100053	CF 330 OHM +-5% 1/8W
R212	0100073	CF 2.2K OHM +-5% 1/8W
R213	0100077	CF 3.3K OHM +-5% 1/8W
R214	0100077	CF 3.3K OHM +-5% 1/8W
R215	0100041	CF 100 OHM +-5% 1/8W
R216	0100072	CF 2K OHM +-5% 1/8W
R217	0100073	CF 2.2K OHM +-5% 1/8W
R218	0100065	CF 1K OHM +-5% 1/8W
R219	0100027	CF 27 OHM +-5% 1/8W
R221	0113725	CF 100 OHM +-5% 1/2W
R222	0100053	CF 330 OHM +-5% 1/8W
R223	0100123	CF 270K OHM +-5% 1/8W
R301	0187065	CF 1K OHM +-5% 1/16W
R302	0187065	CF 1K OHM +-5% 1/16W
R303	0187063	CF 820 OHM +-5% 1/16W
R304	0187081	CF 4.7K OHM +-5% 1/16W
R305	0100087	CF 8.2K OHM +-5% 1/8W
R305	0187085	CF 6.8K OHM +-5% 1/16W
R306	0187101	CF 33K OHM +-5% 1/16W
R307	0159704	VR 10K OHM-B RV-16
R310	0159704	VR 10K OHM-B RV-16
R311	0187051	CF 270 OHM +-5% 1/16W
R312	0187041	CF 100 OHM +-5% 1/16W
R314	0100121	CF 220K OHM +-5% 1/8W
R315	0187095	CF 18K OHM +-5% 1/16W
R316	0187095	CF 18K OHM +-5% 1/16W
R317	0187074	CF 2.4K OHM +-5% 1/16W
R318	0187095	CF 18K OHM +-5% 1/16W
R319	0187063	CF 820 OHM +-5% 1/16W
R320	0100059	CF 560 OHM +-5% 1/8W
R401	0110115	MF 56 OHM +-5% 1W
R402	0187065	CF 1K OHM +-5% 1/16W
R403	0187055	CF 390 OHM +-5% 1/16W
R404	0187063	CF 820 OHM +-5% 1/16W
R405	0187083	CF 5.6K OHM +-5% 1/16W
R406	0100065	CF 1K OHM +-5% 1/8W
R407	0187073	CF 2.2K OHM +-5% 1/16W
R408	0187061	CF 680 OHM +-5% 1/16W
R409	0100109	CF 68K OHM +-5% 1/8W
R410	0110122	MF 110 OHM+-5% 1W
R411	0110169	MF 10K OHM +-5% 1W
R412	0100122	CF 240K OHM +-5% 1/8W
R413	0187063	CF 820 OHM +-5% 1/16W
R415	0187057	CF 470 OHM +-5% 1/16W
R420	0100083	CF 5.6K OHM +-5% 1/8W
R421	0100076	CF 3K OHM +-5% 1/8W
R422	0100053	CF 330 OHM +-5% 1/8W
● R451	0113725	CF 100 OHM +-5% 1/2W
R501	0187073	CF 2.2K OHM +-5% 1/16W
R502	0159704	VR 10K OHM-B RV-16
R503	0100129	CF 470K OHM +-5% 1/8W
R504	0187071	CF 1.8K OHM +-5% 1/16W
R505	0159704	VR 10K OHM-B RV-16
R506	0187053	CF 330 OHM +-5% 1/16W
R507	0187053	CF 330 OHM +-5% 1/16W
R508	0187053	CF 330 OHM +-5% 1/16W
R509	0187081	CF 4.7K OHM +-5% 1/16W
R510	0187081	CF 4.7K OHM +-5% 1/16W
R511	0187081	CF 4.7K OHM +-5% 1/16W
R512	0187081	CF 4.7K OHM +-5% 1/16W
R513	0179536	MG 1M OHM +-5% 1/8W
● R551	0187051	CF 270 OHM +-5% 1/16W
● R552	0187083	CF 5.6K OHM +-5% 1/16W
● R553	0187113	CF 100K OHM +-5% 1/16W
● R554	0100069	CF 1.5K OHM +-5% 1/8W

●..... For CT1342/CT13C2 only

PRODUCT SAFETY NOTE: Components marked with a ⚠ have special characteristics important to safety. Before replacing any of these components, read carefully, the PRODUCT SAFETY NOTICE of this Service Manual. Don't degrade the safety of the receiver through improper servicing.

SYMBOL NO.	PART NO.	DESCRIPTION
●R555	0187031	CF 39 OHM +-5% 1/16W
●R556	0187027	CF 27 OHM +-5% 1/16W
●R557	0187040	CF 91 OHM +-5% 0.063W
●R558	0187041	CF 100 OHM +-5% 1/16W
●R559	0187113	CF 100K OHM +-5% 1/16W
●R560	0187094	CF 16K OHM +-5% 1/16W
●R561	0187107	CF 56K OHM +-5% 1/16W
●R562	0187085	CF 6.8K OHM +-5% 1/16W
●R563	0187099	CF 27K OHM +-5% 1/16W
●R564	0100117	CF 150K OHM +-5% 1/8W
●R565	0187103	CF 39K OHM +-5% 1/16W
●R566	0187059	CF 560 OHM +-5% 1/16W
●R567	0187057	CF 470 OHM +-5% 1/16W
●R568	0187075	CF 2.7K OHM +-5% 1/16W
●R573	0187077	CF 3.3K OHM +-5% 1/16W
●R574	0187083	CF 5.6K OHM +-5% 1/16W
●R575	0187091	CF 12K OHM +-5% 1/16W
●R576	0100057	CF 470 OHM +-5% 1/8W
●R577	0100099	CF 27K OHM +-5% 1/8W
⚠R601	0119505	FR 2.2 OHM +-5% 1/4W
R602	0100097	CF 22K OHM +-5% 1/8W
R603	0100101	CF 33K OHM +-5% 1/8W
R604	0100053	CF 330 OHM +-5% 1/8W
R605	0113733	CF 220 OHM +-5% 1/2W
R606	0113690	CF 3.9 OHM +-5% 1/2W
R607	0100091	CF 12K OHM +-5% 1/8W
R608	0151265	VR 200 OHM-B RS-10
R609	0100089	CF 10K OHM +-5% 1/8W
R611	0100029	CF 33 OHM +-5% 1/8W
R612	0100121	CF 220K OHM +-5% 1/8W
R613	0100103	CF 39K OHM +-5% 1/8W
R614	0100081	CF 4.7K OHM +-5% 1/8W
R615	0100059	CF 560 OHM +-5% 1/8W
R616	0100125	CF 330K OHM +-5% 1/8W
R621	0114163	CF 1.2K OHM +-5% 1/4W
⚠R701	0119505	FR 2.2 OHM +-5% 1/4W
⚠R702	0119512	MF 1 OHM +-5% 1W
⚠R703	0119505	FR 2.2 OHM +-5% 1/4W
R704	0100111	CF 82K OHM +-5% 1/8W
⚠R706	0100047	CF 180 OHM +-5% 1/8W
R707	0113763	CF 3.6K OHM +-5% 1/2W
R709	0100047	CF 180 OHM +-5% 1/8W
⚠R710	0100075	CF 2.7K OHM +-5% 1/8W
R711	0113787	CF 33K OHM +-5% 1/2W
R712	0100053	CF 330 OHM +-5% 1/8W
R713	0113774	CF 10K OHM +-5% 1/2W
R714	0100071	CF 1.8K OHM +-5% 1/8W
⚠R715	0113705	CF 15 OHM +-5% 1/2W
⚠R716	0113705	CF 15 OHM +-5% 1/2W
⚠R717	0113705	CF 15 OHM +-5% 1/2W
⚠R719	0100081	CF 4.7K OHM +-5% 1/8W
R720	0114137	CF 180 OHM +-5% 1/4W
R721	0113774	CF 10K OHM +-5% 1/2W
R722	0113774	CF 10K OHM +-5% 1/2W
R723	0113774	CF 10K OHM +-5% 1/2W
R724	0113787	CF 33K OHM +-5% 1/2W
R725	0113787	CF 33K OHM +-5% 1/2W
R726	0113787	CF 33K OHM +-5% 1/2W
R727	0100073	CF 2.2K OHM +-5% 1/8W
R728	0100109	CF 68K OHM +-5% 1/8W
R729	0113748	CF 820 OHM+-5% 1/2W
R751	0119504	FR 0.5 OHM +-5% 1/4W
R851	0100043	CF 120 OHM +-5% 1/8W
R852	0100049	CF 220 OHM +-5% 1/8W
R853	0100047	CF 180 OHM +-5% 1/8W
R854	0150078	VR 500 OHM-B RV-8
R855	0150078	VR 500 OHM-B RV-8
R856	0100067	CF 1.2K OHM +-5% 1/8W
R857	0100067	CF 1.2K OHM +-5% 1/8W
R858	0100067	CF 1.2K OHM +-5% 1/8W
R859	0150081	VR 5K OHM-B RV-8
R860	0150081	VR 5K OHM-B RV-8
R861	0150081	VR 5K OHM-B RV-8
R862	0110173	MF 15K OHM +-5% 1W
R863	0110173	MF 15K OHM +-5% 1W
R864	0110173	MF 15K OHM +-5% 1W
R865	0113760	CF 2.7K OHM +-5% 1/2W
R866	0113754	CF 1.5K OHM +-5% 1/2W
R867	0113760	CF 2.7K OHM +-5% 1/2W
R868	0100053	CF 330 OHM +-5% 1/8W
R869	0100053	CF 330 OHM +-5% 1/8W
R870	0100069	CF 1.5K OHM +-5% 1/8W
⚠R901	0141133	WW 2.7 OHM +-10% 7W
⚠R905	0141130	WW 240 OHM +-5% 10W
⚠R906	0113709	CF 22 OHM +-5% 1/2W
⚠R908	0113709	CF 22 OHM +-5% 1/2W
⚠R909	0113709	CF 22 OHM +-5% 1/2W

ICs

IC201	2368692	IC LA7521
IC501	2910011	IC LA7620
⚠IC601	2910021	IC LA7830

●..... For CT1342/CT13C2 only

PRODUCT SAFETY NOTE: Components marked with a ⚠ have special characteristics important to safety. Before replacing any of these components, read carefully, the PRODUCT SAFETY NOTICE of this Service Manual. Don't degrade the safety of the receiver through improper servicing.

SYMBOL NO.	PART NO.	DESCRIPTION
TRANSISTORS		
Q201	0573480	TR 2SC458B
Q202	0573480	TR 2SC458B
Q301	2320637	TR 2SA673C/D
Q302	0573480	TR 2SC458B
Q303	0573480	TR 2SC458B
Q401	2322562	TR 2SC2688 K/L/M
Q402	2322562	TR 2SC2688 K/L/M
● Q551	2320595	TR 2SC458D
● Q552	2320595	TR 2SC458D
● Q553	2320595	TR 2SC458D
● Q555	0573480	TR 2SC458B
Q701	2324322	TR 2SC2271/2SC2610-05
⚠ Q702	2324411	TR 2SD1453
Q703	2323521	TR 2SD789(B/C)
Q851	2322561	TR 2SC2688 K/L/M/N
Q852	2322561	TR 2SC2688 K/L/M/N
Q853	2322561	TR 2SC2688 K/L/M/N
⚠ Q901	2323642	TRS ET-192-01
DIODES		
D302	2331351	DI 1S2076/1S2473H
D401	2331351	DI 1S2076/1S2473H
● D551	2333173	DI 1N34A/1K34A
● D552	2333173	DI 1N34A/1K34A
● D554	2331351	DI 1S2076/1S2473H
● D555	2331351	DI 1S2076/1S2473H
● D556	2331351	DI 1S2076/1S2473H
D601	2333011	DI SM-1-02FRA
D602	2330256	DI V06CS
D605	2331351	DI 1S2076/1S2473H
⚠ D701	2333011	DI SM-1-02FRA
D702	2333011	DI SM-1-02FRA
⚠ D703	2332851	DI EH1Z
D706	2330351	DI 1S2076
⚠ D901	2331991	DI R02A
⚠ D902	2330251	DI V06C
ZD304	2331154	ZD HZ12(A)/(B)/(C)
ZD305	2331154	ZD HZ12(A)/(B)/(C)
ZD306	2331154	ZD HZ12(A)/(B)/(C)
ZD601	2334312	DI RD33EB1
⚠ ZD701	2335042	DI HZ22-2L
ZD702	2331154	ZD HZ12(A)/(B)/(C)
⚠ ZD704	2334052	ZD RD2.7EB1
ZD705	2331823	ZD HZ9(A)3

SYMBOL NO.	PART NO.	DESCRIPTION
THERMISTORS		
⚠ TH901	2340521	PTC THERMISTOR
COILS		
L202	2142951	TRAP COIL
L203	2142941	IF COIL
L204	2142941	IF COIL
L205	2122944	LAL AXIAL COIL 12 UH
L206	2120482	FILTER COIL 100MH +-10%
L207	2122298	LA AXIAL COIL 0.82 MICRO H
L301	2122956	LAL AXIAL COIL 100MH +-10%
L401	2122954	LAL AXIAL COIL 68MH +-10%
L501	2122943	LAL AXIAL COIL 10MH +-10%
L701	2120482	FILTER COIL 100MH +-10%
⚠ L901	2122712	LINE FILTER
⚠ L902	2163581	DEGAUSSING COIL
TRANSFORMERS		
T301	2163521	DELAY LINE
⚠ T401	2250451	SOUND OUTPUT TRANSFORMER
⚠ T701	2260021	TRANS HORIZONTAL DRIVE
⚠ T702	2434131	FLYBACK TRANSFORMER
COMPOUND COMPONENTS		
CP201	2300271	SAW FILTER HW2065
⚠ CP901	2371232	MODULE HM9192
MF201	2142241	CERAMIC FILTER 4.5MHZ
MF401	2142601	CERAMIC FILTER 4.5MHZ
MF402	2142761	CERAMIC DISCRI
⚠ MF701	2791062	CERAMIC OSC
FUSES		
⚠ F901	2720587	FUSE 4A
⚠ F902	2720812	FUSE 0.8A
MISCELLANEOUS		
⚠ ● J451	2670751	EARPHONE JACK
SG851	2340037	SPARK GAP
⚠ SG901	2340037	SPARK GAP
⚠ SP451	2411001	SPEAKER 80MM

●..... For CT1342/CT13C2 only

PRODUCT SAFETY NOTE: Components marked with a ⚠ have special characteristics important to safety. Before replacing any of these components, read carefully, the PRODUCT SAFETY NOTICE of this Service Manual. Don't degrade the safety of the receiver through improper servicing.

SYMBOL NO.	PART NO.	DESCRIPTION	SYMBOL NO.	PART NO.	DESCRIPTION
S551	2630582	PUSH SWITCH		4159421	M3X8 TAPPING SCREW
S901	2610499	PUSH-PULL SWITCH WITH VR		4159423	M3X12 SCREW FOR RC PWB
⚠V1	2352943	CPT 370LGB22E			W/WASHER
X501	2790441	CRYSTAL		4194801	SCREW-3*8 POLY WAVE
⚠	2424333	V TUNER HT-457C			
⚠	2426071	U TUNER HU-427A			
⚠	2441538	DEFLECTION YOKE			
	2666462	FEEDER SET WITH SLEEVE			
	2680576	BS TERMINAL			
	2687562	ULCSA ANTENNA BOX			
	2687951	VHF ADAPTOR			
	2720221	FUSE HOLDER			
●⚠	2730082	EARPHONE			
⚠	2742553	AC CORD			
	2750011	TELESCOPIC ANTENNA			
	2750524	LOOP ANTENNA			
	2784331	CPT SOCKET FOCUS COVER			
	2786281	MICA SHEET			
	2950472	FOCUS INSULATION PART			
	3010931	FRAME SASS (CT1341)			
	3010932	FRAME SASS (CT13C1)			
	3010933	FRAME SASS (CT1342)			
	3010935	FRAME SASS (CT13C2)			
	3259961	KNOB-UHF FINE			
	3259984	KNOB CHANNEL UHF (CT1341/CT13C1)			
	3259986	KNOB CHANNEL UHF (CT1342/CT13C2)			
	3260161	KNOB-PRESET FINE TUNING			
	3260822	KNOB INNER UHF			
	3262442	KNOB-APS			
	3263382	KNOB CHANNEL VHF (CT1341/CT13C1)			
	3263383	KNOB CHANNEL VHF (CT1342/CT13C2)			
	3263392	KNOB VR SASS			
	3263561	KNOB MAIN (CT1342/CT13C2)			
	3263562	KNOB MAIN (CT1341/CT13C1)			
⚠	3328791	ANTENNA TERMINAL BOARD ASS			
	3332021	EARTH SPRING			
⚠	3417771	ANTENNA TERMINAL BOARD ASS'Y			
	3457813	BACK COVER ASS'Y			
	3719342	CANOE RIVET			
	3739671	BS CORD HOLDER			
	3746481	CLAMP			
	4137975	4X16 SELF-TAPPING SCREW WITH FLANGE			

●..... For CT1342/CT13C2 only

HITACHI PARTS ORDERING INFORMATION

To receive original replacement parts, please contact your nearest HITACHI Parts Distributor or contact Hitachi Central Parts Warehouse listed below. Be sure to indicate part catalog number, part description and model number (located on back of product).

THE ELECTRONIC DISTRIBUTION CO.
1509 E. Del. Amo Blvd. Carson, CA. 90746
Phone #213-639-4120

TEL-VIDEO CORPORATION
1921 N. Milwaukee Avenue Chicago, ILL. 60647
Phone #312-235-6190

REMCOR ELECTRONICS
10670 W. 9 Mile Road Oak Park, MI. 48237
Phone #313-541-5666

VANCE BALDWIN, INC.
7700 N.W. 7th Avenue Miami, FLA. 33150
Phone #305-693-2921

PANSON ELECTRONICS
32-70 31st ST. Long Island City, N.Y. 11106
Phone #212-545-8888

TEE-VEE SUPPLY CO.
3211 Washington St. Jamaica Plain, MA. 02130
Phone #617-522-9330

MARTIN WHOLESALE, INC.
6 Terrace Shopping Center Richardson, Tx. 75081
Phone #214-231-1826

HARCO ELECTRONICS, INC.
Carsin Run Aberdeen, MD. 21001
Phone #301-838-7990

HITACHI SERVICE MANUALS

To order HITACHI Service Manuals contact:

HITACHI SALES CORPORATION OF AMERICA
Central Parts Warehouse 401 W. Artesia Blvd.
Compton, CA 90220
Phone #213-537-8383

For imformation concerning repairs, operation or technical assistance, please contact the Service Manager of the nearest Hitachi Regional Office, Service Division listed:

Southern Regional Office
510 Plaza Dr. College Park, GA 30349
Phone #404-763-0360

Mid-Western Regional Office
1400 Morse Avenue Elk Grove Village, IL 60007
Phone #312-593-1550

Eastern Regional Office
1200 Wall Street West Lyndhurst, NJ 07071
Phone #201-935-8980

Western Regional Office
401 W. Artesia Blvd. Compton, CA 90220
Phone #213-537-8383

HITACHI SALES CORPORATION OF AMERICA

NATIONAL HEADQUARTERS OFFICE:	401 West Artesia Blvd., Compton Calif. 90220	Tel. 213-537-8383
Western Regional Office:	401 West Artesia Blvd., Compton Calif. 90220	Tel. 213-537-8383
Eastern Regional Office:	1200 Wall St. West, Lyndhurst, N.J 07071	Tel. 201-935-8980
Mild-Western Regional Office:	1400 Morse Ave., Elk Grove Village Chicago, Ill. 60007	Tel. 312-593-1550
Southern Regional Office:	510 Plaza DR., College Park, Georgia 30349	Tel. 404-763-0360

HITACHI SALES CORPORATION OF HAWAII, INC.

3219 Koapaka Street Honolulu, Hawaii 96819 Tel. 836-3621

HITACHI SALES CORPORATION DE PANAMA, S.A.

Apartado 7656, Panama 5, Calle Ramon Arias Y Calle B, Edificio Brasil 100,
Nuevo Reparto el Carmen, Republic de Panama Tel. 61-3100

Printed in Japan YS-Y(F)

CT1341/CT13C1/CT1342/CT13C2-511 YK No.999E YOKOHAMA
NTSC-SYSTEM NP84SX Chassis